Social Media & Text Analysis

lecture 9 - Deep Learning for NLP

Follow @cocoweixu

CSE 5539-0010 Ohio State University
Instructor: Wei Xu
Website: socialmedia-class.org

some slides are adapted from Richard Socher, Greg Durret, Chris Dyer, Dan Jurafsky, Chris Manning

A Neuron

- If you know Logistic Regression, then you already understand a basic neural network neuron!

A single neuron
A computational unit with *n* (3) inputs
and 1 output
and parameters *W, b*

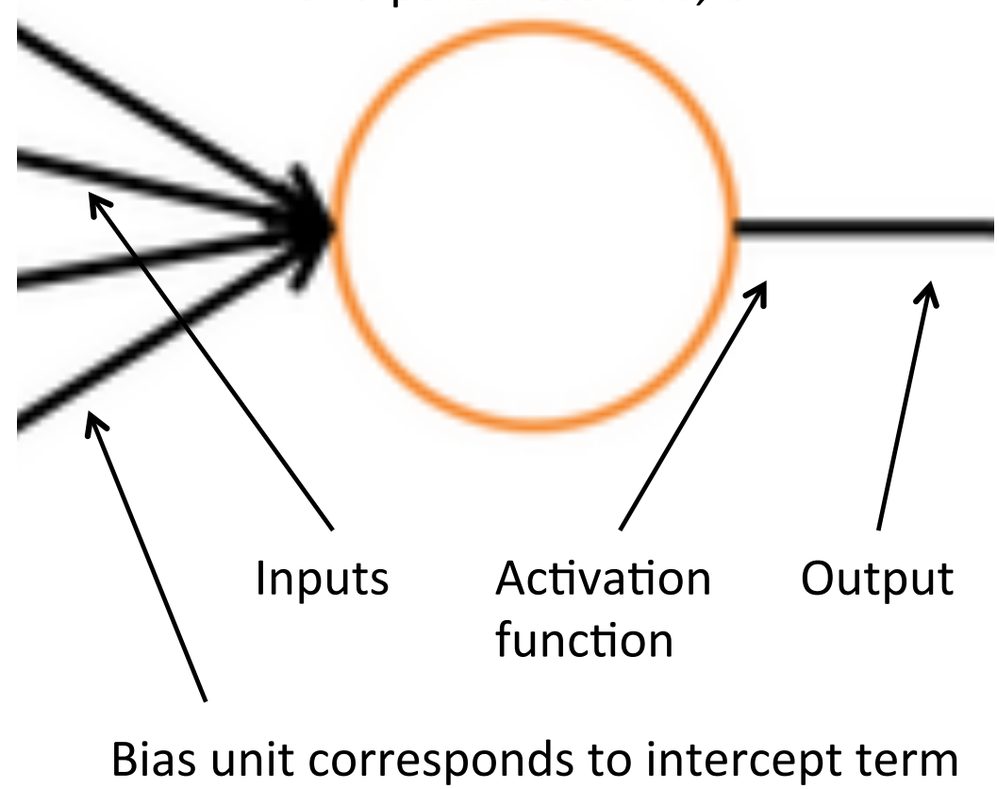

A Neuron

is essentially a binary logistic regression unit

$$h_{w,b}(x) = f(w^{\mathsf{T}}x + b)$$

b: We can have an "always on" feature, which gives a class prior, or separate it out, as a bias term

$$f(z) = \frac{1}{1+e^{-z}}$$

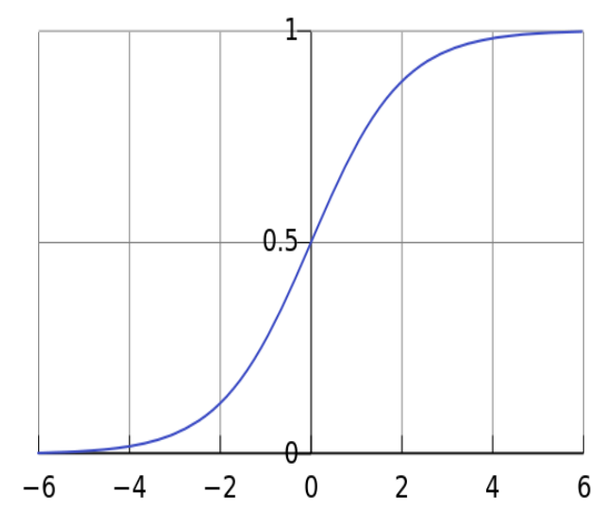

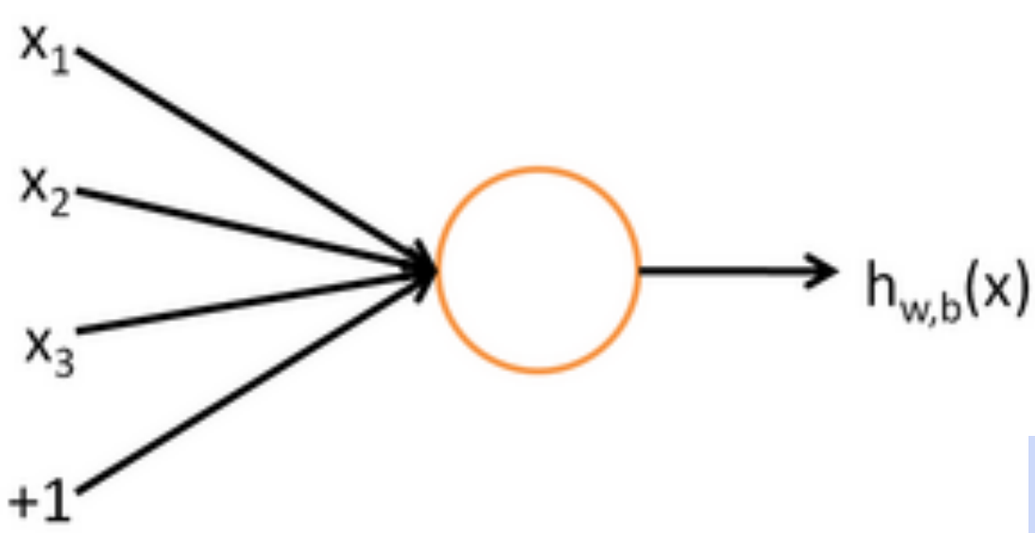

w, *b* are the parameters of this neuron
i.e., this logistic regression model

A Neural Network

= running several logistic regressions at the same time

If we feed a vector of inputs through a bunch of logistic regression functions, then we get a vector of outputs …

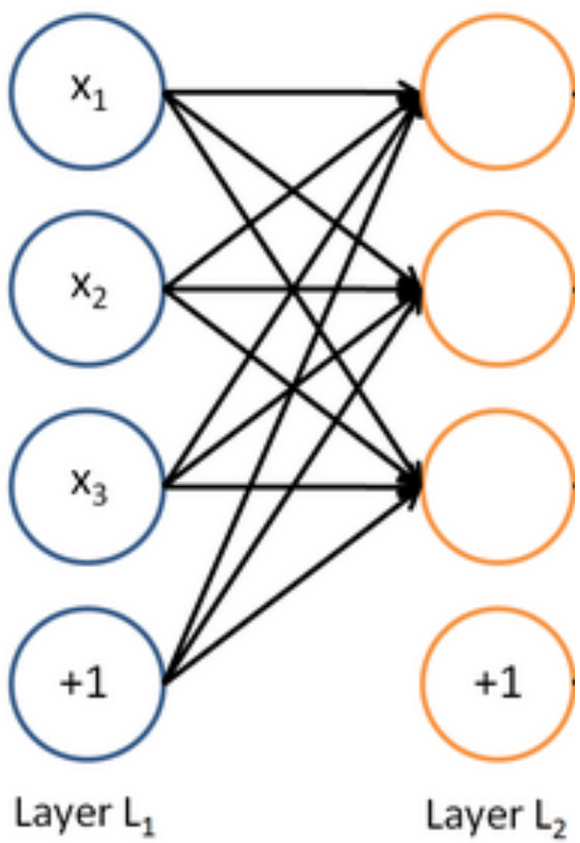

A Neural Network

= running several logistic regressions at the same time

… which we can feed into another logistic regression function

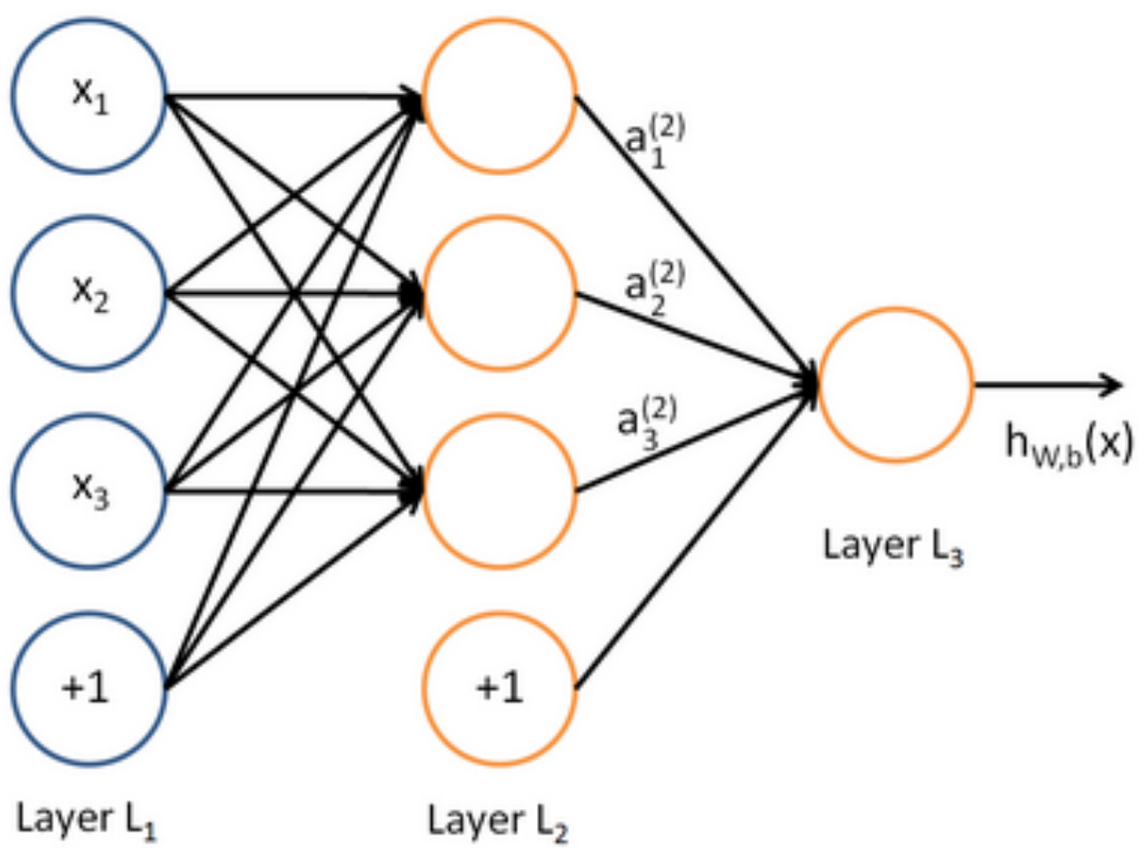

It is the loss function that will direct what the intermediate hidden variables should be, so as to do a good job at predicting the targets for the next layer, etc.

A Neural Network

= running several logistic regressions at the same time

Before we know it, we have a multilayer neural network….

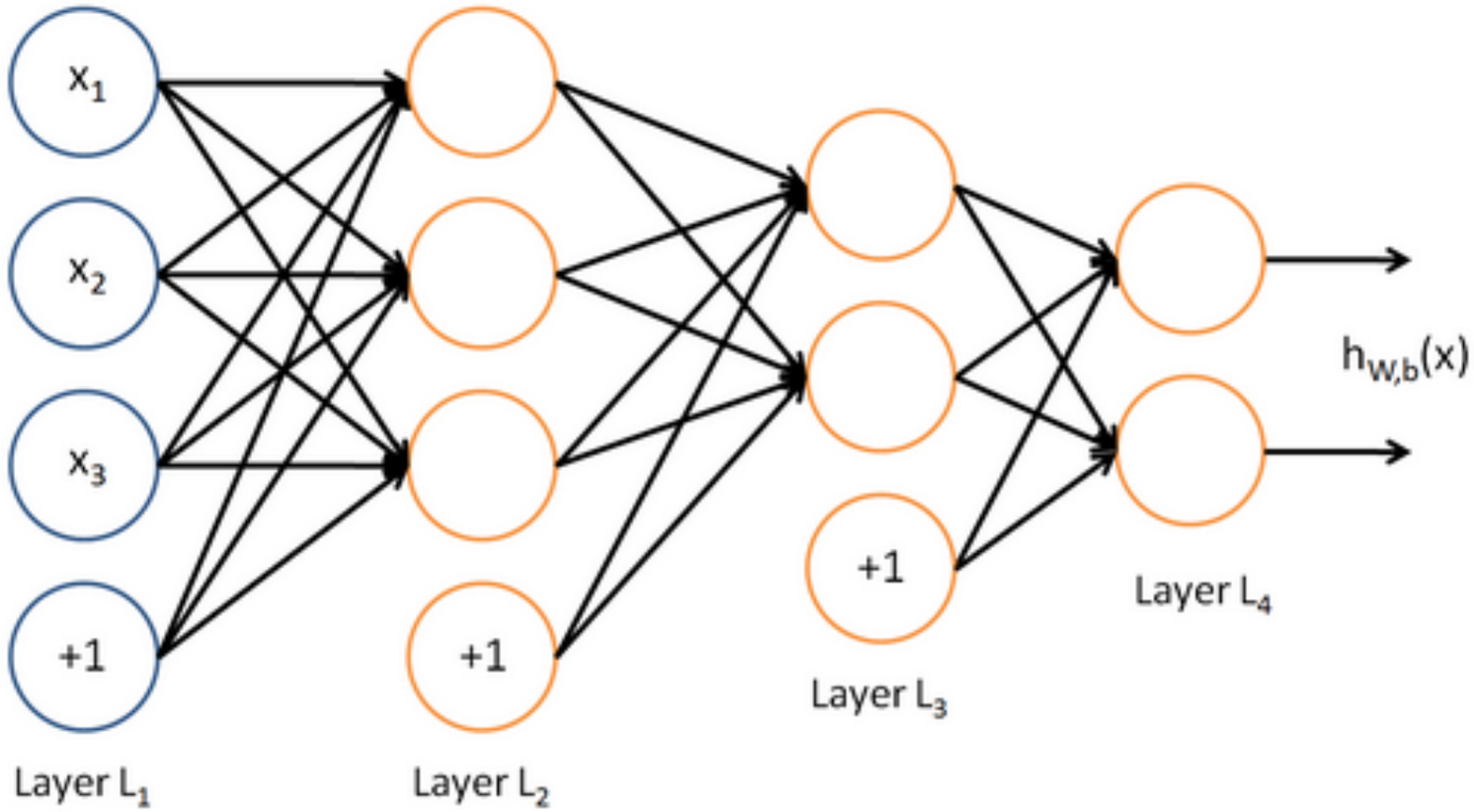

f: Activation Function

We have

$$a_1 = f(W_{11}x_1 + W_{12}x_2 + W_{13}x_3 + b_1)$$

$$a_2 = f(W_{21}x_1 + W_{22}x_2 + W_{23}x_3 + b_2)$$

etc.

In matrix notation

$$z = Wx + b$$

$$a = f(z)$$

where f is applied element-wise:

$$f([z_1, z_2, z_3]) = [f(z_1), f(z_2), f(z_3)]$$

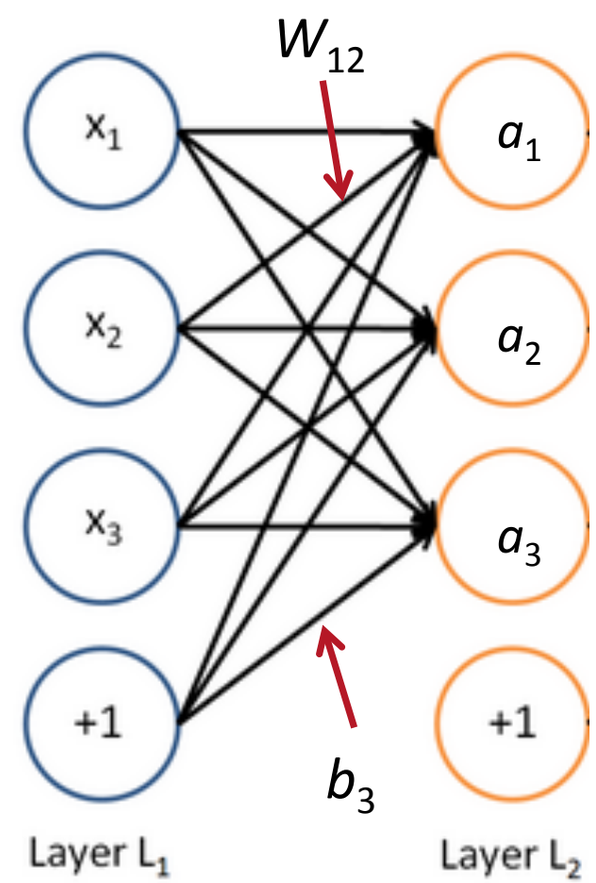

Activation Function

logistic ("sigmoid")

$$f(z) = \frac{1}{1 + \exp(-z)}.$$

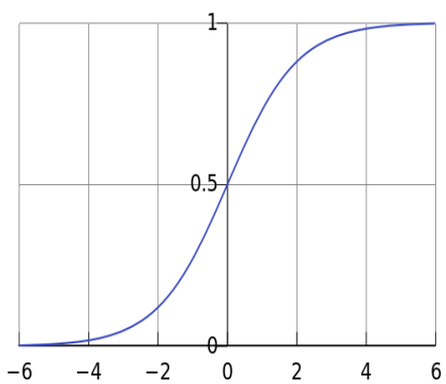

$$f'(z) = f(z)(1 - f(z))$$

tanh

$$f(z) = \tanh(z) = \frac{e^z - e^{-z}}{e^z + e^{-z}},$$

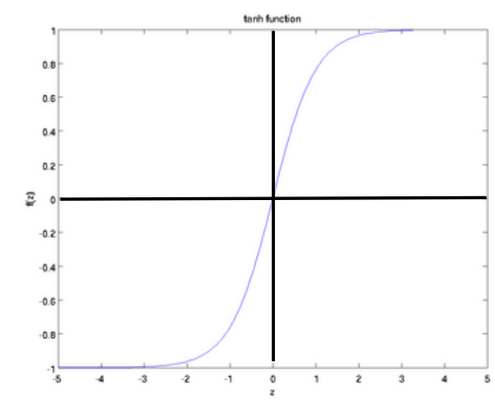

$$f'(z) = 1 - f(z)^2$$

tanh is just a rescaled and shifted sigmoid

$$\tanh(z) = 2\text{logistic}(2z) - 1$$

Activation Function

hard tanh

$$\text{HardTanh}(x) = \begin{cases} -1 & \text{if } x < -1 \\ x & \text{if } -1 <= x <= 1 \\ 1 & \text{if } x > 1 \end{cases}$$

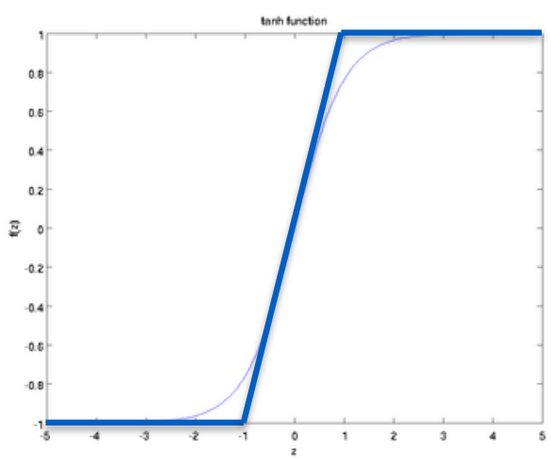

soft sign

$$\text{softsign}(z) = \frac{a}{1+|a|}$$

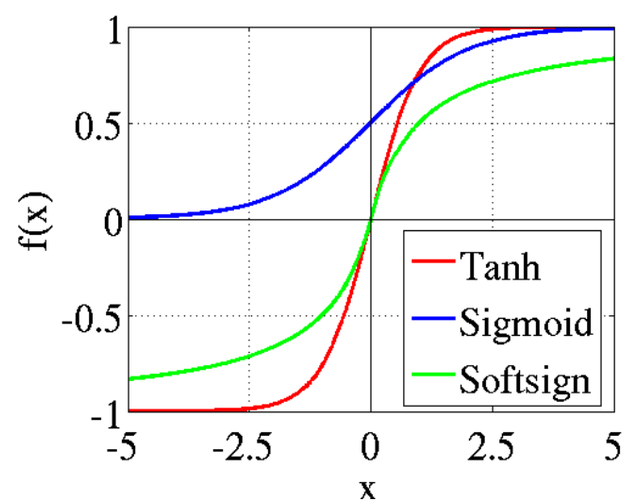

rectified linear (ReLu)

$$\text{rect}(z) = \max(z, 0)$$

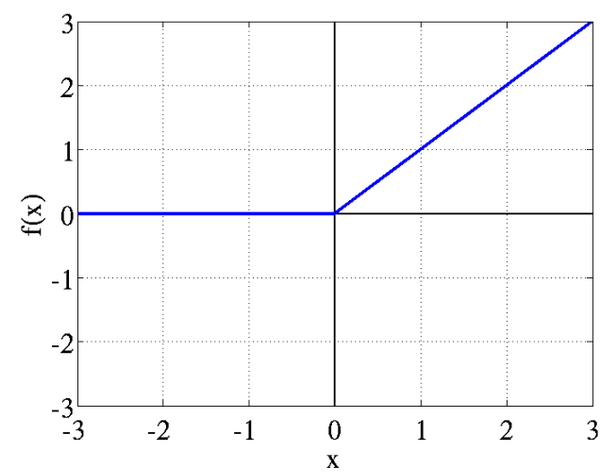

- hard tanh similar but computationally cheaper than tanh and saturates hard.
- Glorot and Bengio, *AISTATS* 2011 discuss softsign and rectifier

Non-linearity

- Logistic (Softmax) Regression only gives linear decision boundaries

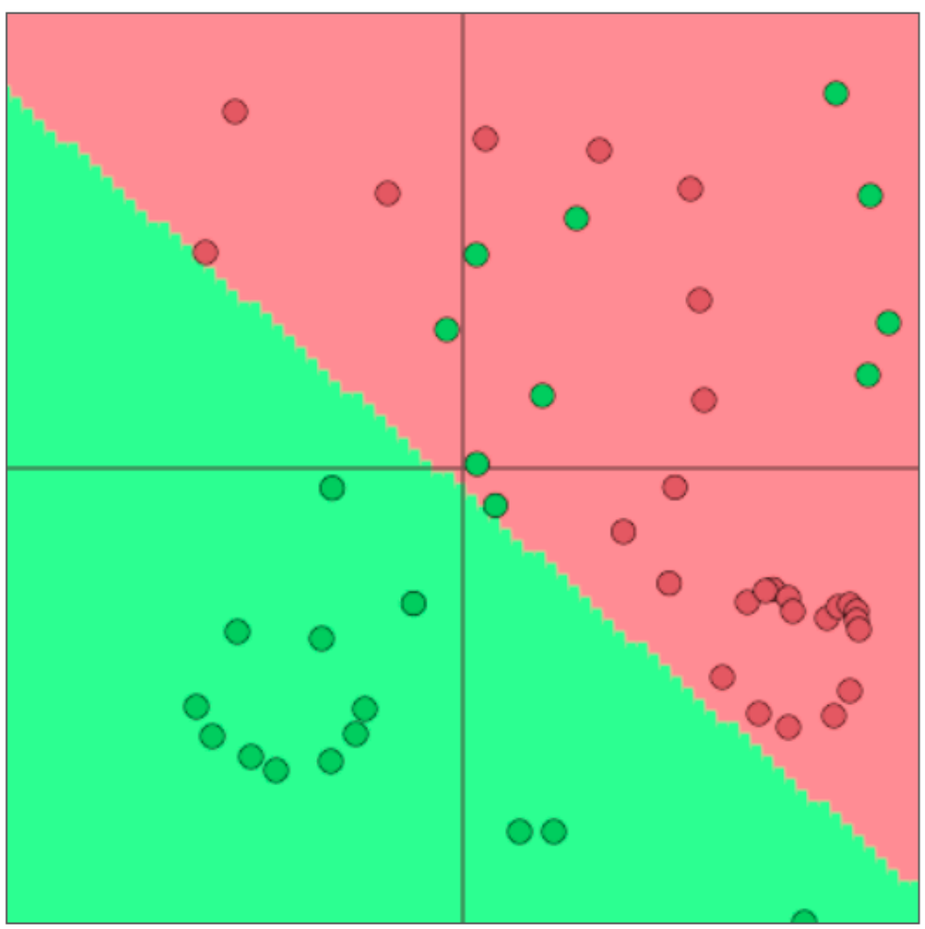

Non-linearity

- Neural networks can learn much more complex functions and nonlinear decision boundaries!

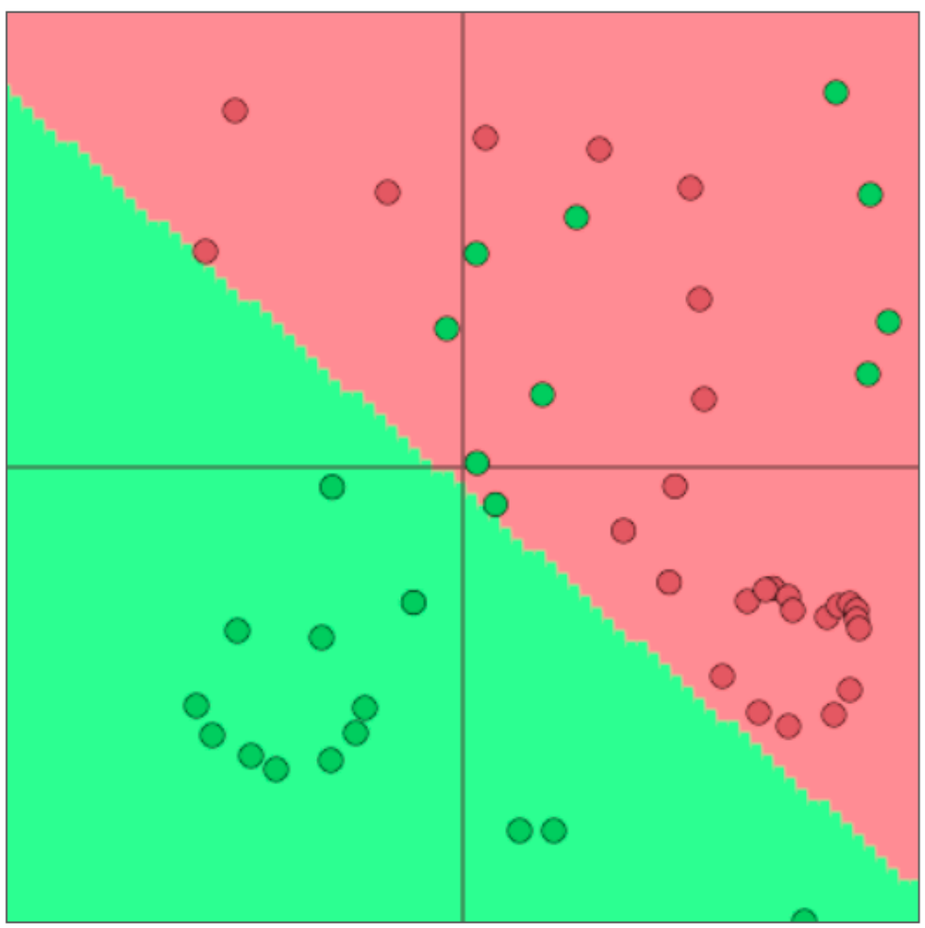

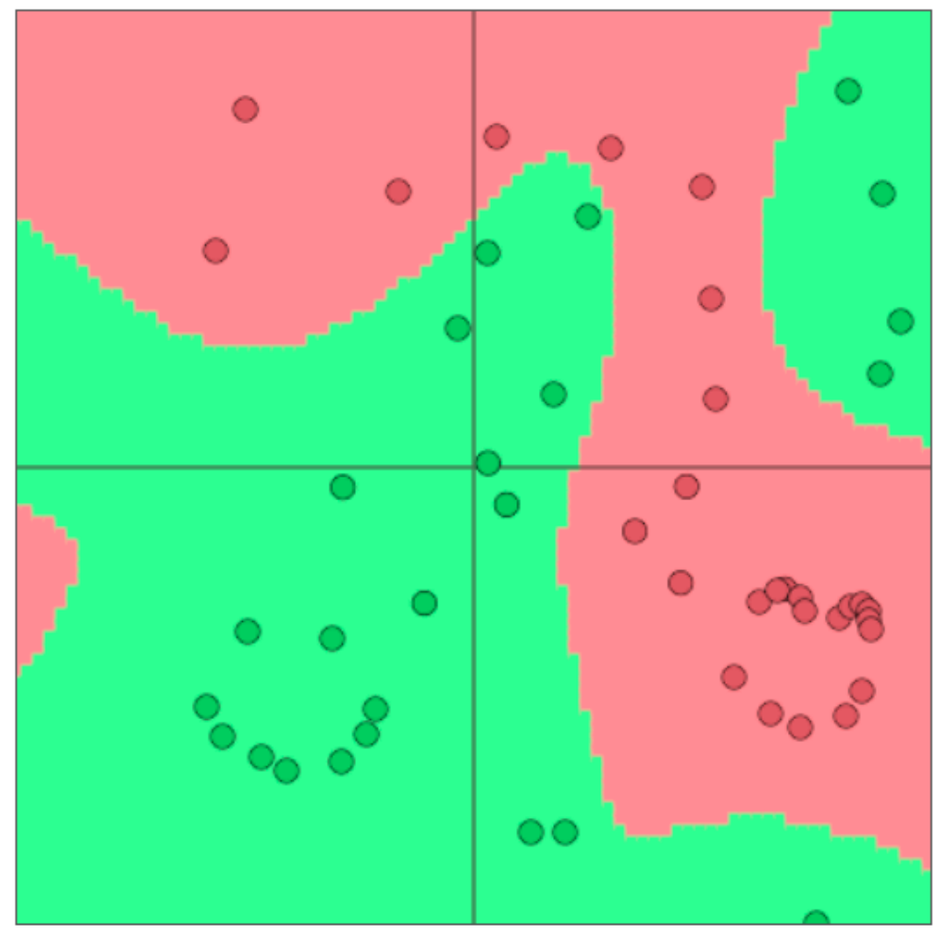

Non-linearity

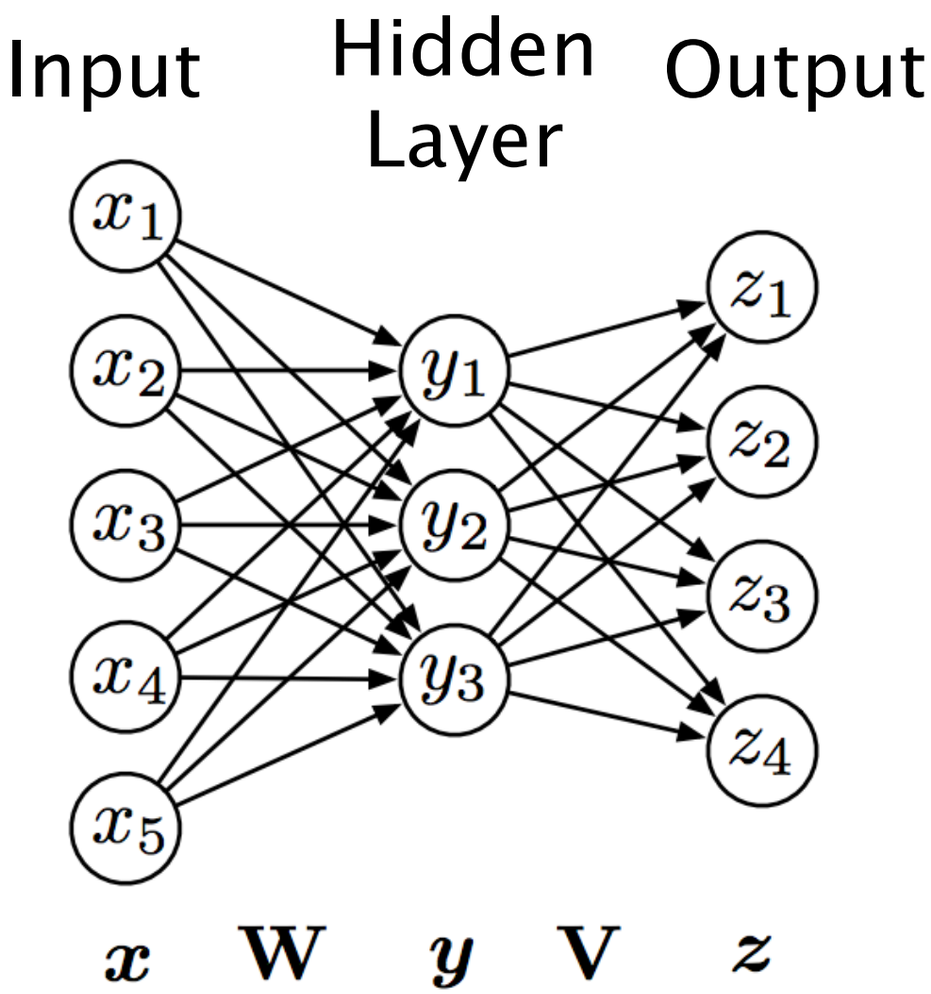

$$\boldsymbol{y} = g(\mathbf{W}\boldsymbol{x} + \boldsymbol{b})$$

$$\mathbf{z} = g(\mathbf{V}\underbrace{g(\mathbf{W}\mathbf{x} + \mathbf{b})}_{\text{output of first layer}} + \mathbf{c})$$

With no nonlinearity:

$$\mathbf{z} = \mathbf{V}\mathbf{W}\mathbf{x} + \mathbf{V}\mathbf{b} + \mathbf{c}$$

Equivalent to $\mathbf{z} = \mathbf{U}\mathbf{x} + \mathbf{d}$

Non-linearity

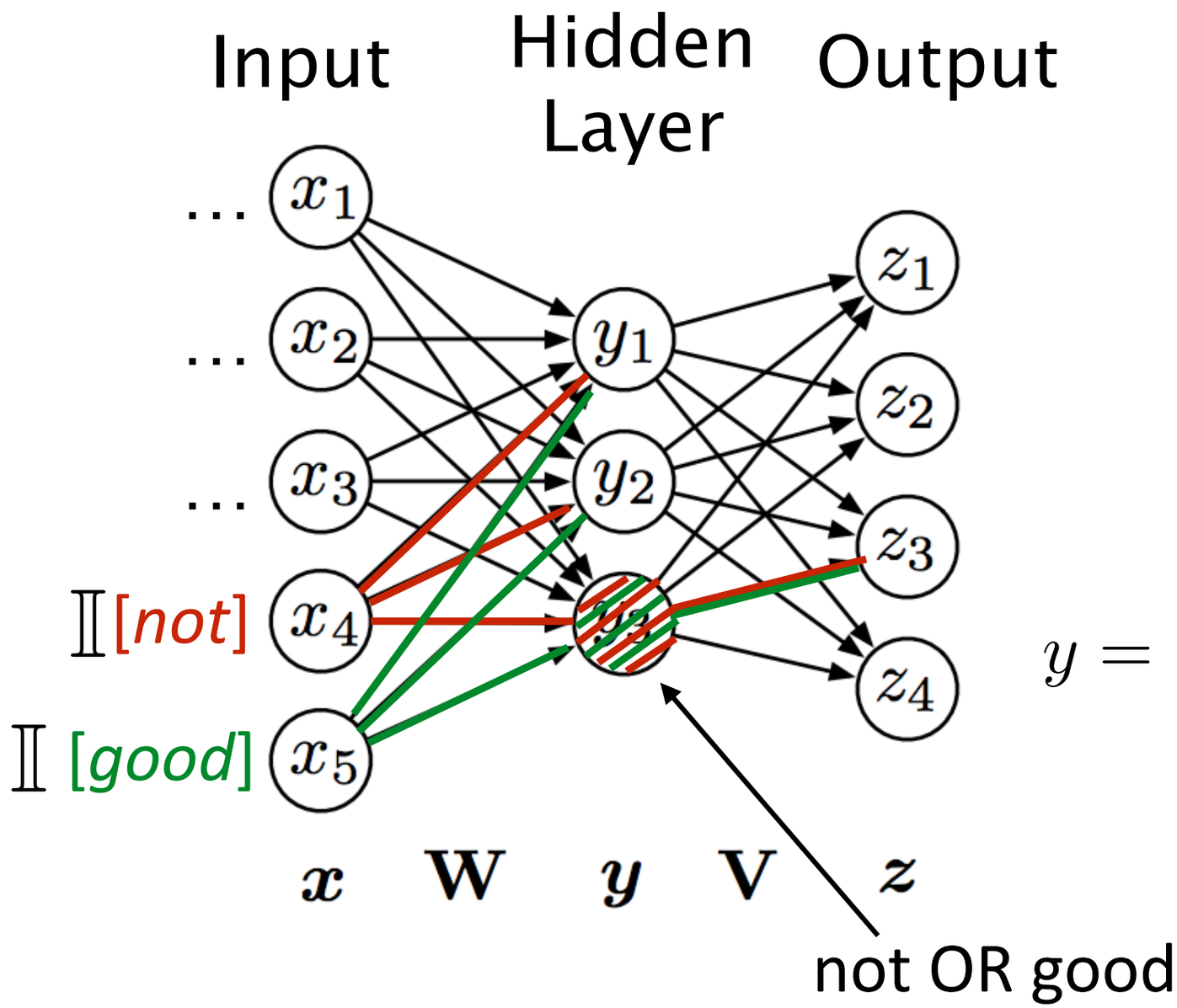

Nodes in the hidden layer can learn interactions or conjunctions of features

$$y = -2x_1 - x_2 + 2\tanh(x_1 + x_2)$$

What about Word2vec (Skip-gram and CBOW)?

So, what about Word2vec (Skip-gram and CBOW)?

It is not deep learning — but “shallow” neural networks.

It is — in fact — a log-linear model (softmax regression).

So, it is faster over larger dataset yielding better embeddings.

Learning Neural Networks

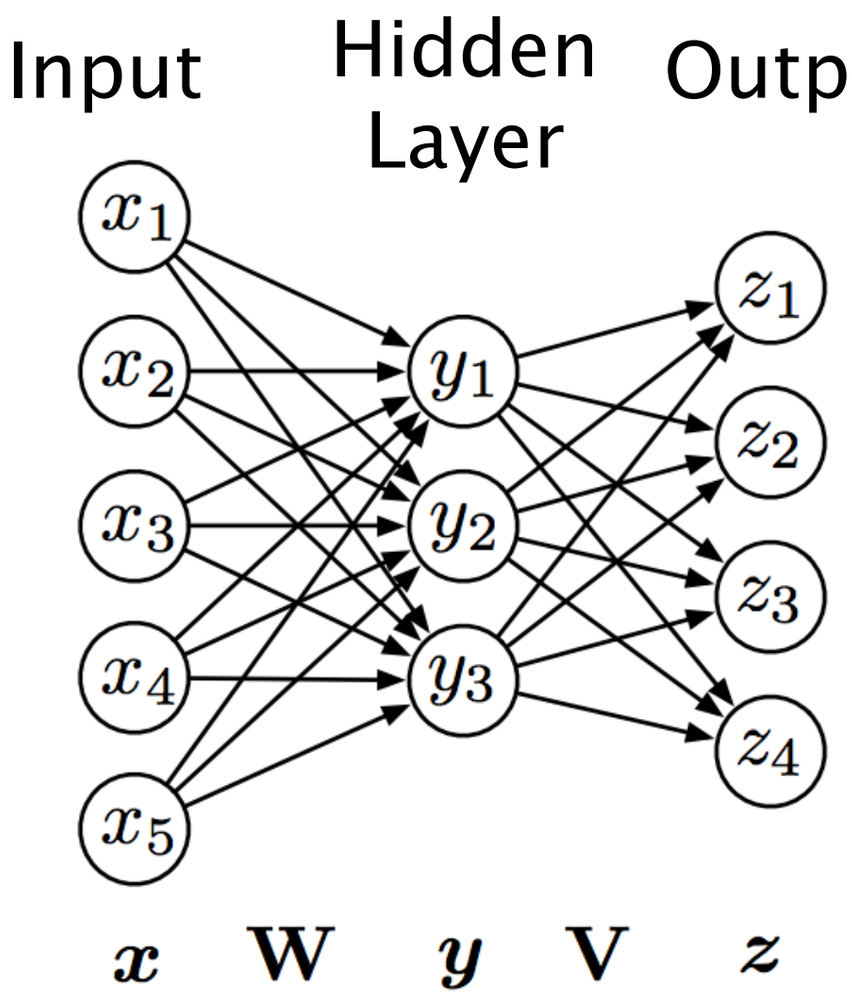

change in output w.r.t. hidden

$$\frac{dz}{dx} = \frac{dz}{dy} \cdot \frac{dy}{dx}$$

change in hidden w.r.t. input

change in output w.r.t. input

Computing these looks like running this network in reverse (backpropagation)

Strategy for Successful NNs

- Select network structure appropriate for problem
  - Structure: Single words, fixed windows, sentence based, document level; bag of words, recursive vs. recurrent, CNN, …
  - Nonlinearity
- Check for implementation bugs with gradient checks
- Parameter initialization
- Optimization tricks
- Check if the model is powerful enough to overfit
  - If not, change model structure or make model “larger”
  - If you can overfit: regularize

Neural Machine Translation

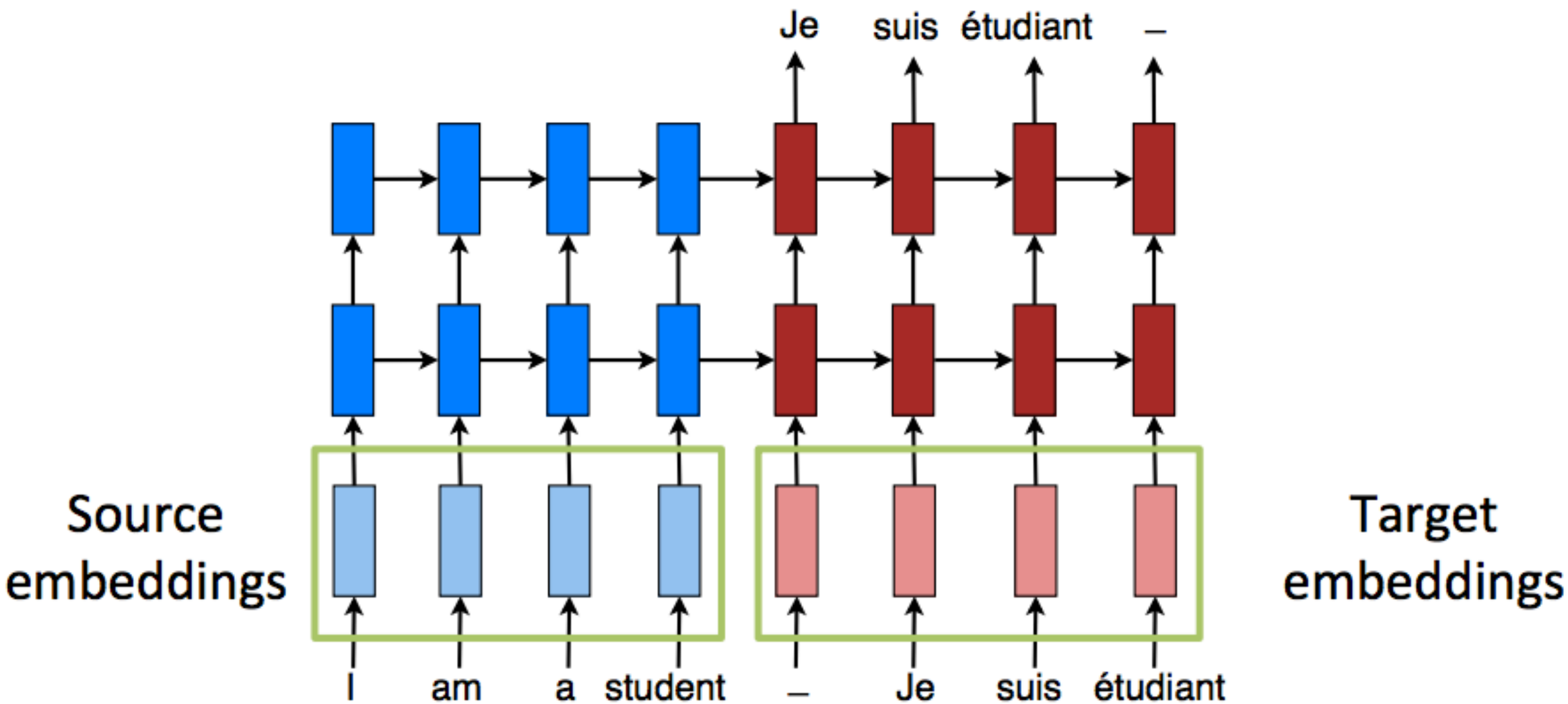

Recurrent Neural Network (RNN)

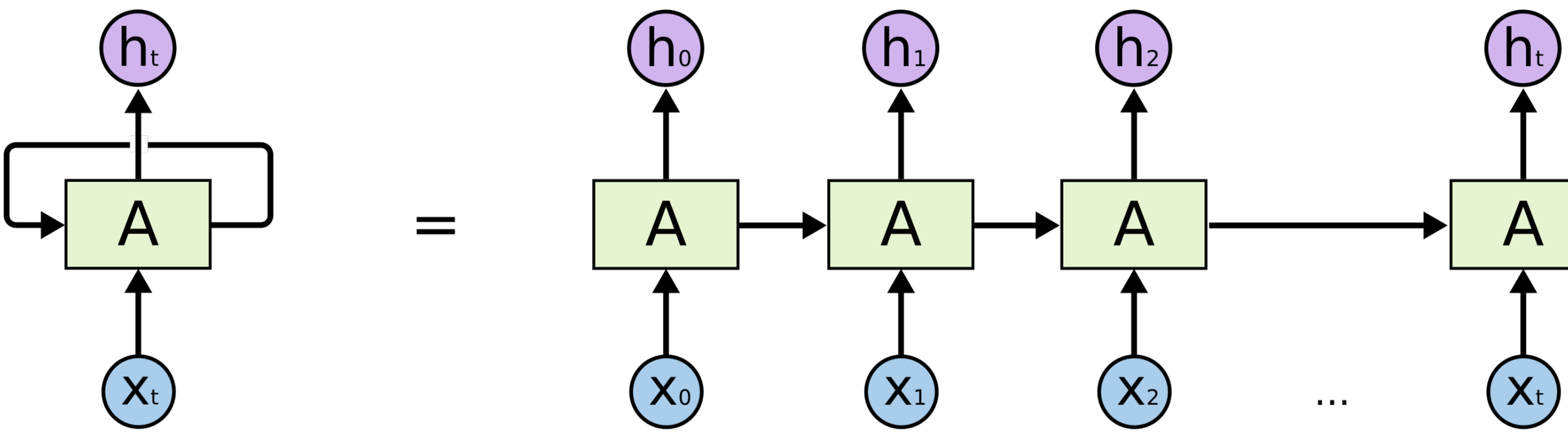

Source: Colah's Blog

Recurrent Neural Network (RNN)

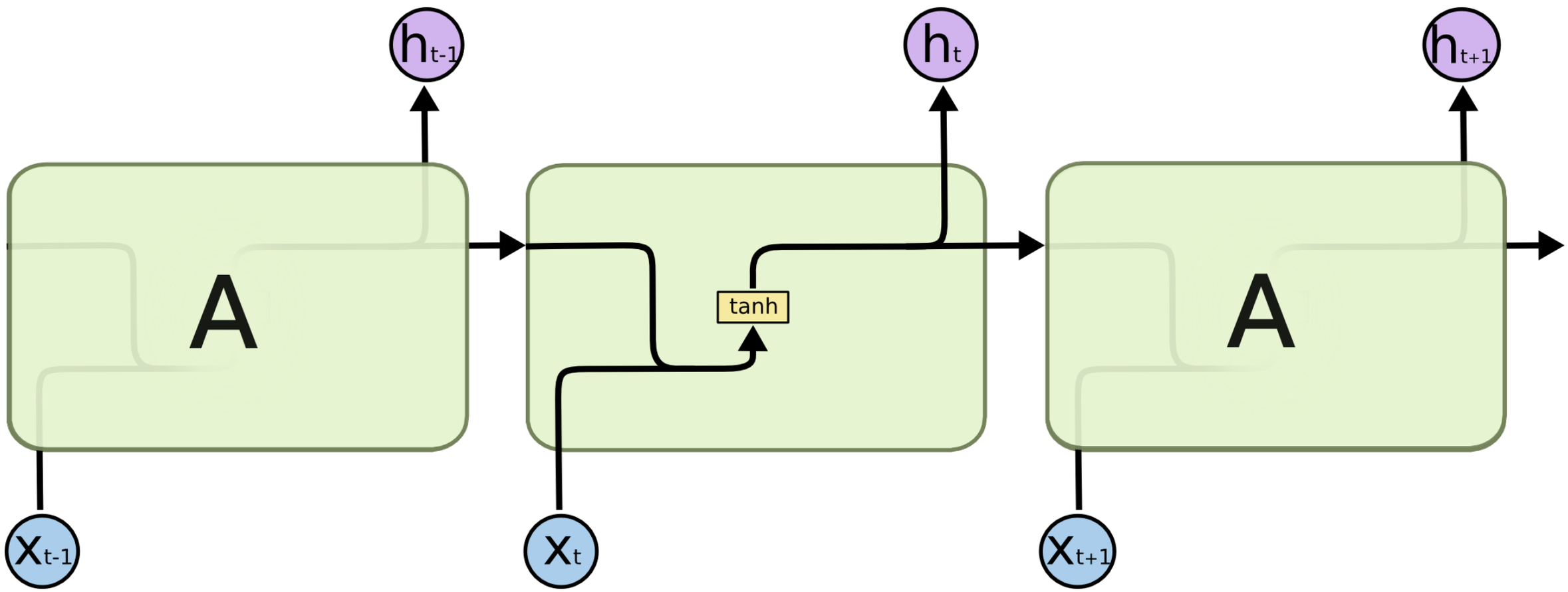

Source: Colah's Blog

Long Short-Term Memory Networks (LSTM)

(Hochreiter & Schmidhuber, 1997)

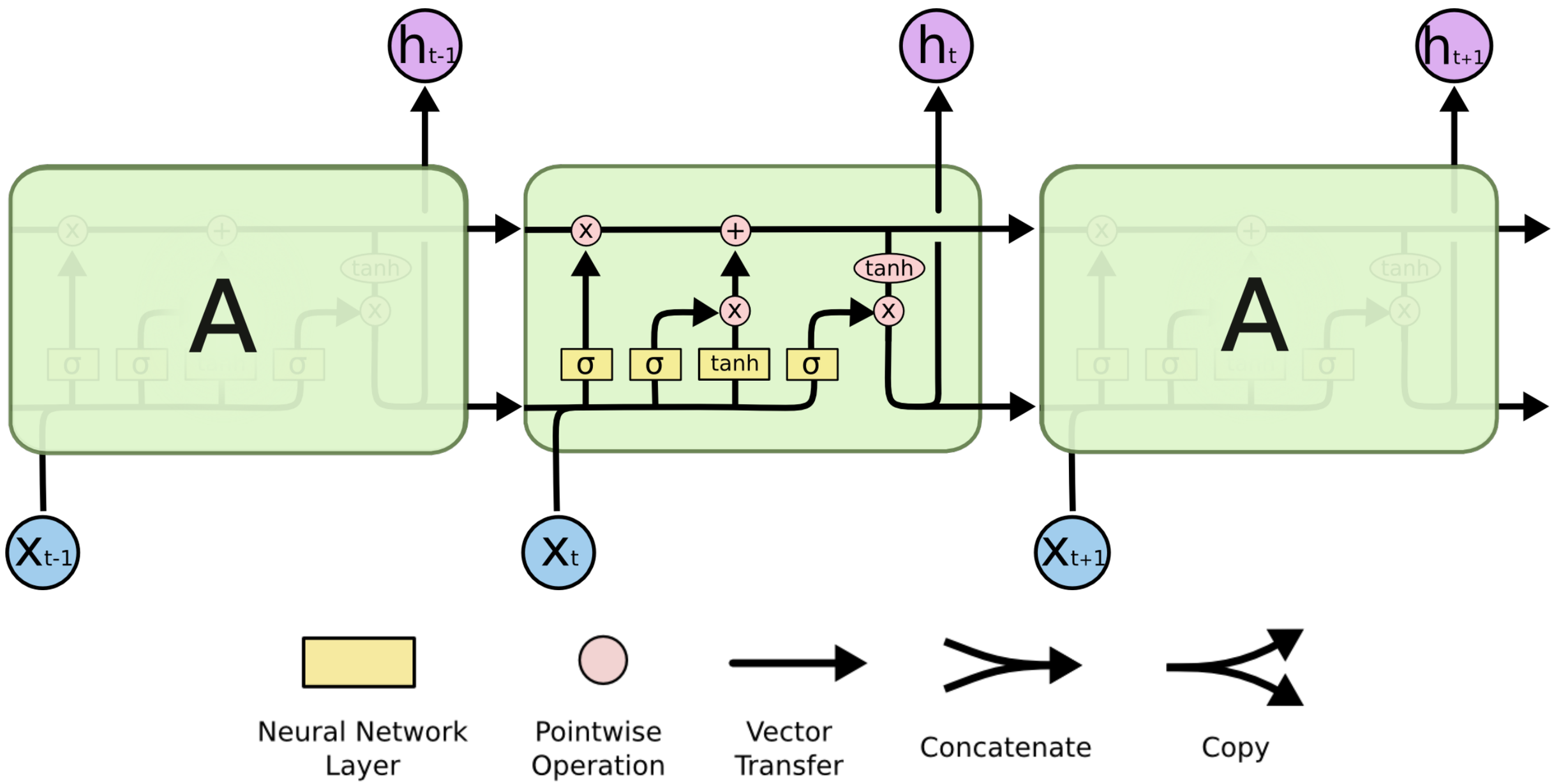

Source: Colah's Blog

Long Short-Term Memory Networks (LSTM)

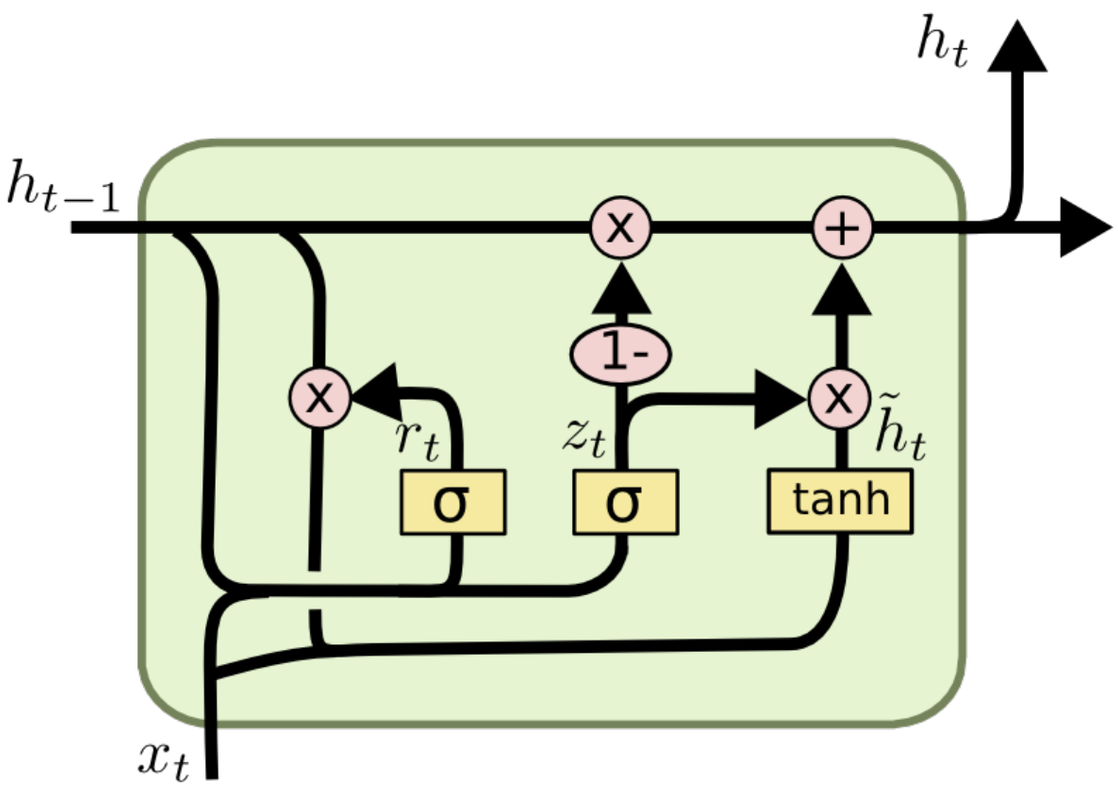

$$z_t = \sigma\left(W_z \cdot [h_{t-1}, x_t]\right)$$

$$r_t = \sigma\left(W_r \cdot [h_{t-1}, x_t]\right)$$

$$\tilde{h}_t = \tanh\left(W \cdot [r_t * h_{t-1}, x_t]\right)$$

$$h_t = (1 - z_t) * h_{t-1} + z_t * \tilde{h}_t$$

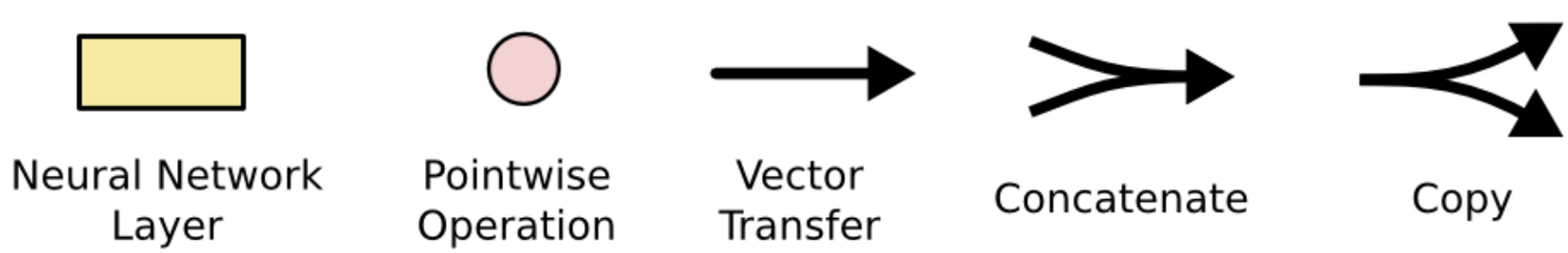

Source: Colah's Blog

Gated Recurrent Unit (GRU)

(Cho et al., 2014)

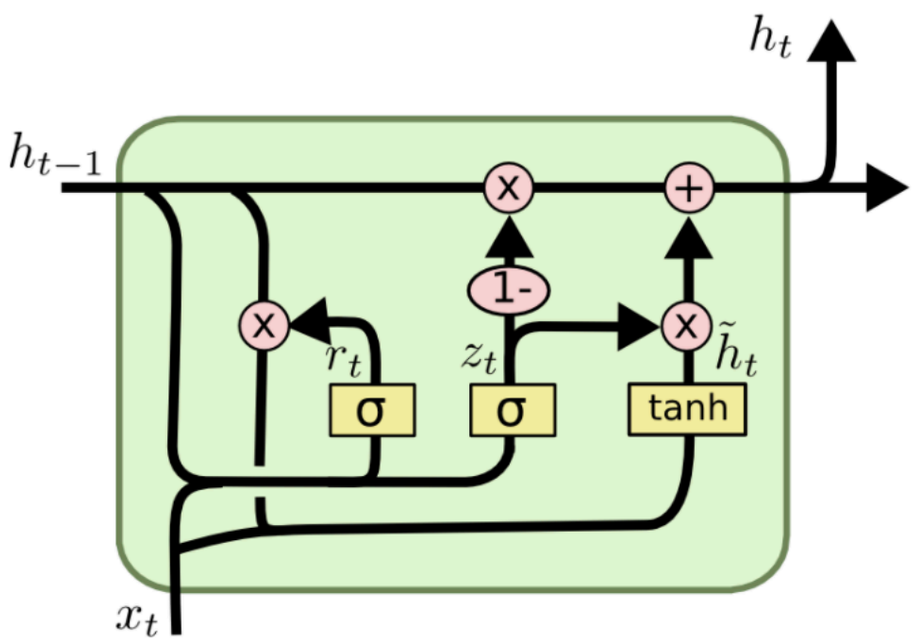

$$z_t = \sigma\left(W_z \cdot [h_{t-1}, x_t]\right)$$

$$r_t = \sigma\left(W_r \cdot [h_{t-1}, x_t]\right)$$

$$\tilde{h}_t = \tanh\left(W \cdot [r_t * h_{t-1}, x_t]\right)$$

$$h_t = (1 - z_t) * h_{t-1} + z_t * \tilde{h}_t$$

Source: Colah's Blog

Twitter Conversation Data

Tesco Mobile @tescomobile 10 Nov
@RiccardoEspaa7 She's clearly going through a rough time in life.
Details

Riccardo Esposito @RiccardoEspaa7 10 Nov
@tescomobile I know either that or shit is going insane! There is nothing wrong with tesco mobile
Details

Tesco Mobile @tescomobile 10 Nov
@RiccardoEspaa7 Together Riccardo, we'll make this world a better place.
Details

Riccardo Esposito @RiccardoEspaa7 10 Nov
@tescomobile me and you against the world
Details

Tesco Mobile @tescomobile 10 Nov
@RiccardoEspaa7 Yeah baby.
Details

Riccardo Esposito @RiccardoEspaa7 10 Nov
@tescomobile no one can stop us
Details

Neural Conversation

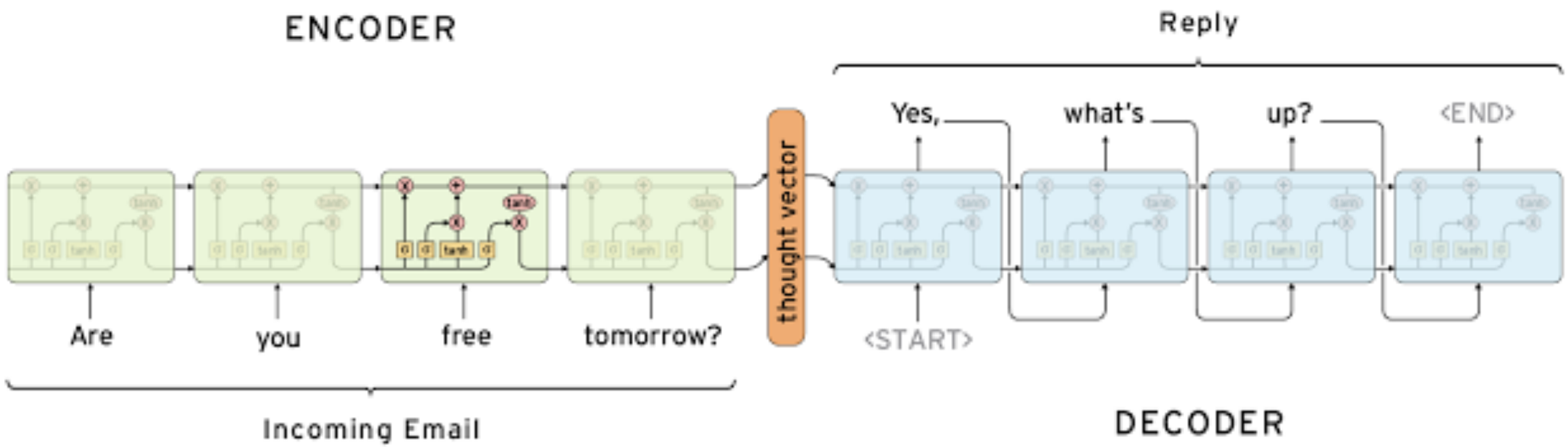

Source: Google's blog

Neural Conversation

modeling speakers

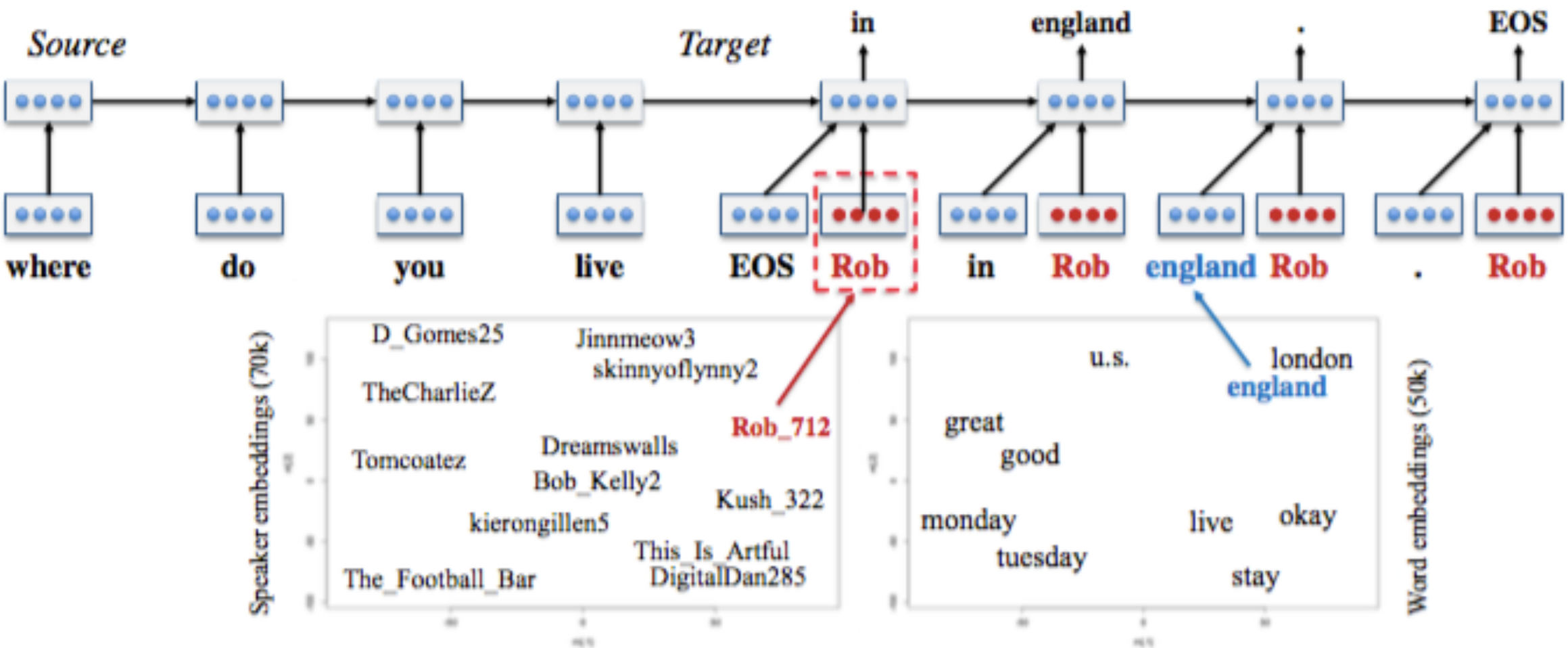

Source: A Persona-Based Neural Conversation Model, Li et al. (ACL 2016)

Neural Network Toolkits

★ **PyTorch**: http://pytorch.org/

- Facebook AI Research and many others

- **Tensorflow**: https://www.tensorflow.org/
  - By Google, actively maintained, bindings for many languages
- **DyNet**: https://github.com/clab/dynet
  - CMU and other individual researchers, dynamic structures that change for every training instance
- **Caffe**: http://caffe.berkeleyvision.org/
  - UC Berkeley, for vision
- **Theano**: http://deeplearning.net/software/theano
  - University of Montreal, less and less maintained

Happy Turkey Day!

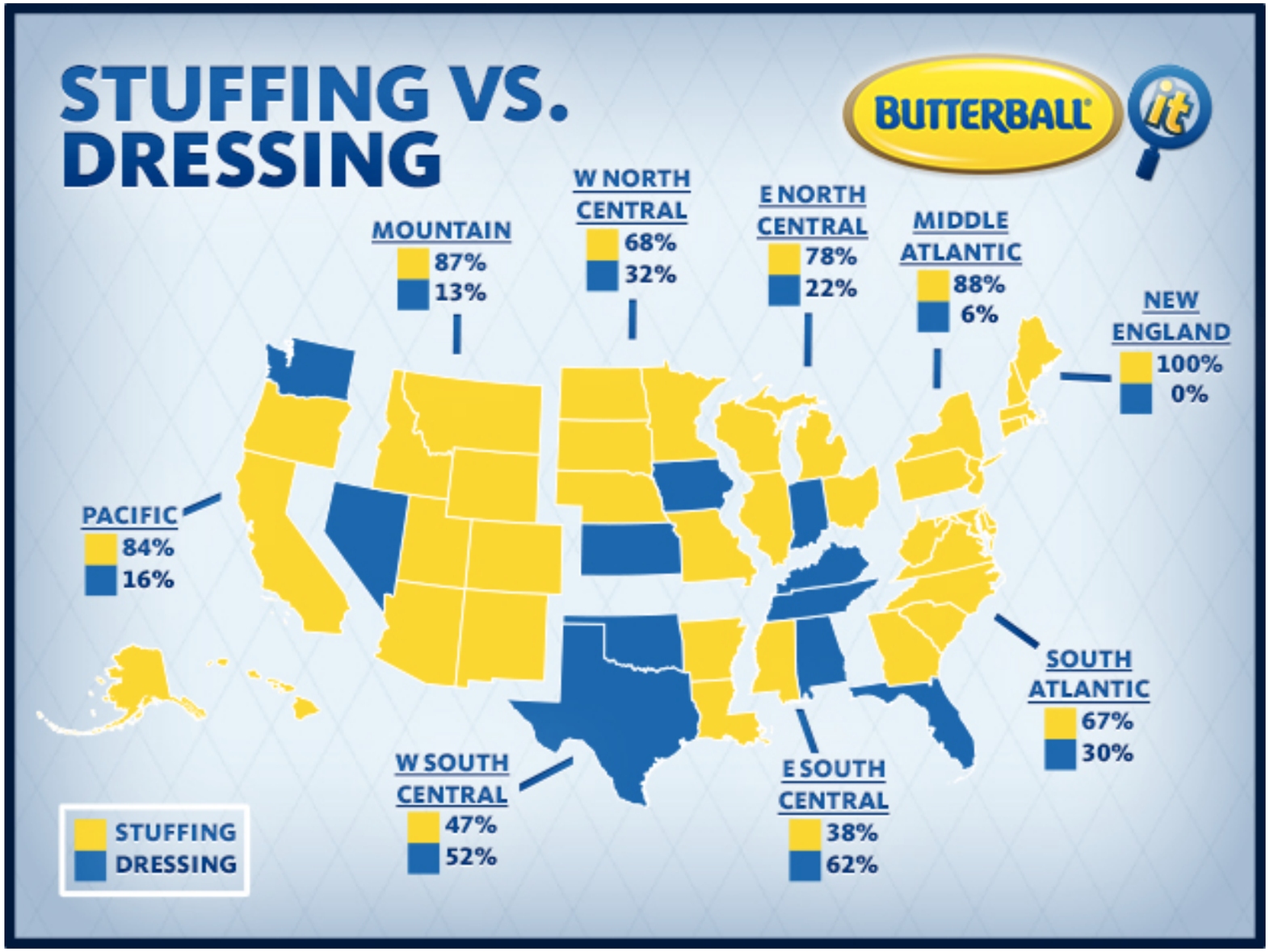

This survey was conducted online with a random sample 1,000 men and women in 9 regions – all members of the CyberPulseTM Advisory Panel. Research was conducted in May 2007. The overall sampling error for the survey is +/-3% at the 95% level of confidence.

Source: http://www.butterball.com/how-tos/stuffing-vs-dressing

Follow @cocoweixu

Instructor: Wei Xu

www.cis.upenn.edu/~xwe/

Course Website: socialmedia-class.org